R.G. STEEL CORP.

GUIDE RAIL PRODUCTS

GUIDE RAIL PRODUCTS

R.G. STEEL CORP.

Rail is supplied hot-dipped galvanized after fabrication in accordance with ASTM A-123.
Type 1 = Zinc coated 1.8 oz/ft² minimum single spot
Type 2 = Zinc coated 3.6 oz/ft² minimum single spot

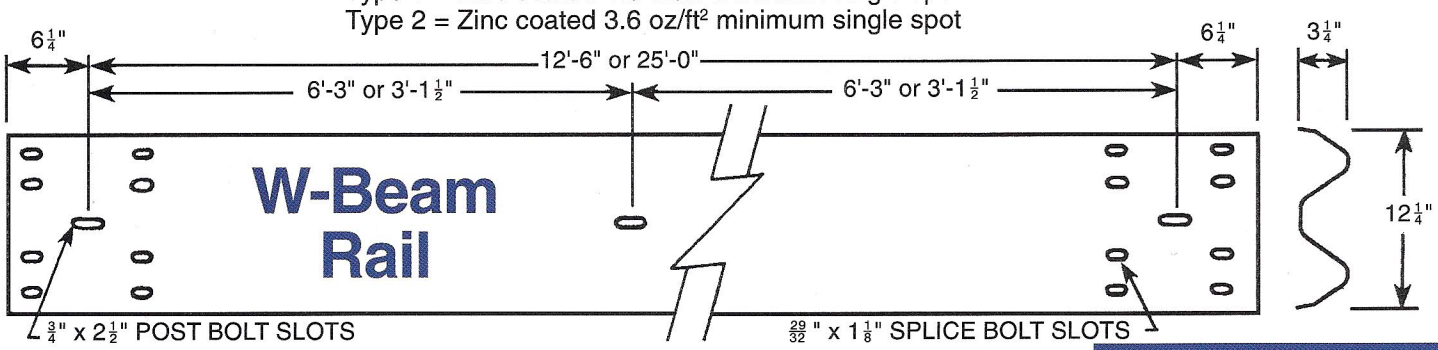

DIMENSIONS AND MECHANICAL PROPERTIES (UNCOATED)

Item	Class A (.105 in. thick)	Class B (.135 in. thick)
Beam width, in., minimum	12	12
Beam depth, in., minimum	3	3
Cross-sectional area, sq. in.	2.01	2.58
Moment of inertia, in.⁴	2.34	3.01
Section modulus, in.³	1.39	1.77
Weight/ft., lb. (approximate)	6.82	8.77

CURVED RAIL

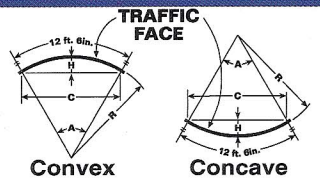

FUNCTIONS OF 12-ft., 6-in. ARC FOR DIFFERENT RADII

Radii	Angle	Chord	Height (Rise)
5	143° 14'	9'-5⅞"	3'-5"
10	71° 37'	11'-8⅜"	1'-10¾"
15	47° 45'	12'-1¾"	1'-3⅜"
20	35° 49'	12'-3⅝"	11⅝"
25	28° 39'	12'-4½"	9⅜"
30	23° 52'	12'-4⅞"	7¾"
35	20° 28'	12'-5⅛"	6⅝"
40	17° 53'	12'-5⅜"	5⅞"
45	15° 55'	12'-5½"	5¼"
50	14° 19'	12'-5⅝"	4⅝"
55	13° 01'	12'-5⅝"	4¼"
60	11° 56'	12'-5¾"	3⅞"
65	11° 01'	12'-5¾"	3⅝"
70	10° 14'	12'-5¾"	3⅜"
75	9° 33'	12'-5¾"	3⅛"
80	8° 57'	12'-5⅞"	3"
85	8° 26'	12'-5⅞"	2¾"
90	7° 58'	12'-5⅞"	2⅝"
95	7° 32'	12'-5⅞"	2½"
100	7° 10'	12'-5⅞"	2⅜"
110	6° 31'	12'-5⅞"	2⅛"
120	5° 58'	12'-6"	2"
130	5° 31'	12'-6"	1¾"
140	5° 07'	12'-6"	1⅝"
150	4° 47'	12'-6"	1½"

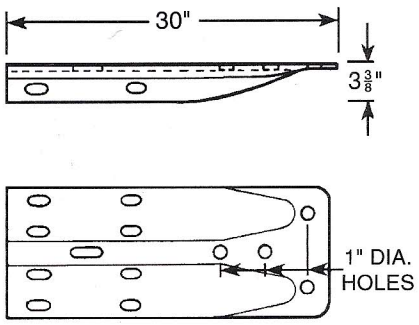

TERMINAL CONNECTOR PARAPET

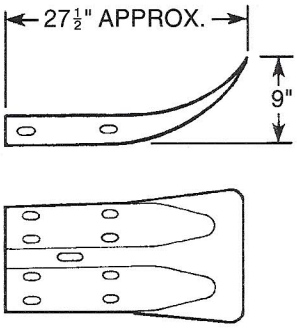

END SECTION (FLARED)

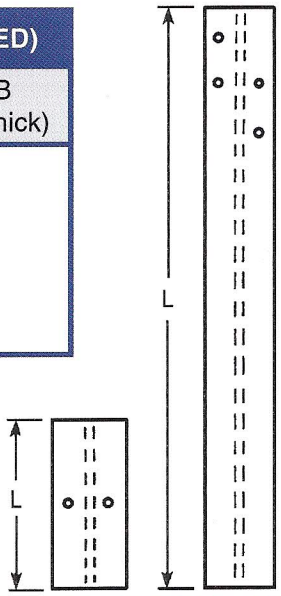

TYPICAL STEEL POST W6 x 8.5 and TYPICAL OFFSET BLOCK

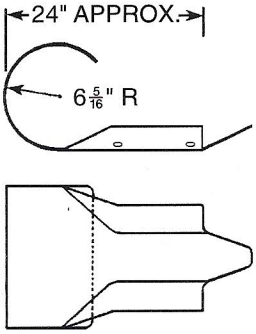

END SECTION (ROUNDED)

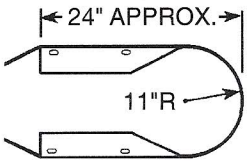

MEDIAN DIVIDER END SECTION

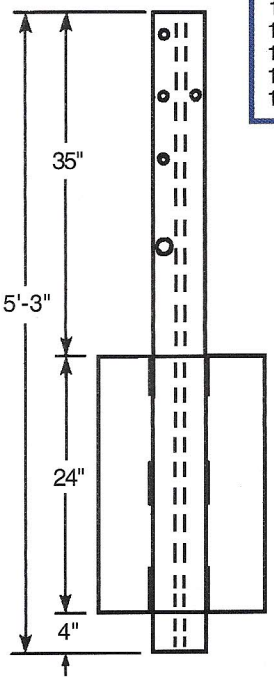

S3 x 5.7 WEAK POST

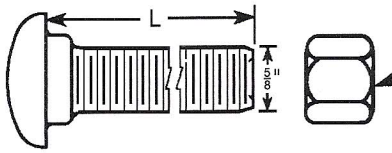

L = 1¼" SPLICE BOLT
L = 2" STEEL POST BOLT
L = 10", 16" OR 18" WOOD POST BOLT

BUTTON HEAD BOLTS AND DOUBLE RECESSED HEX NUTS

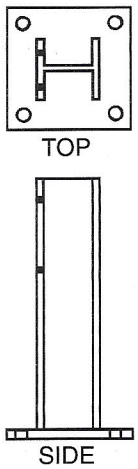

POST ON PLATE

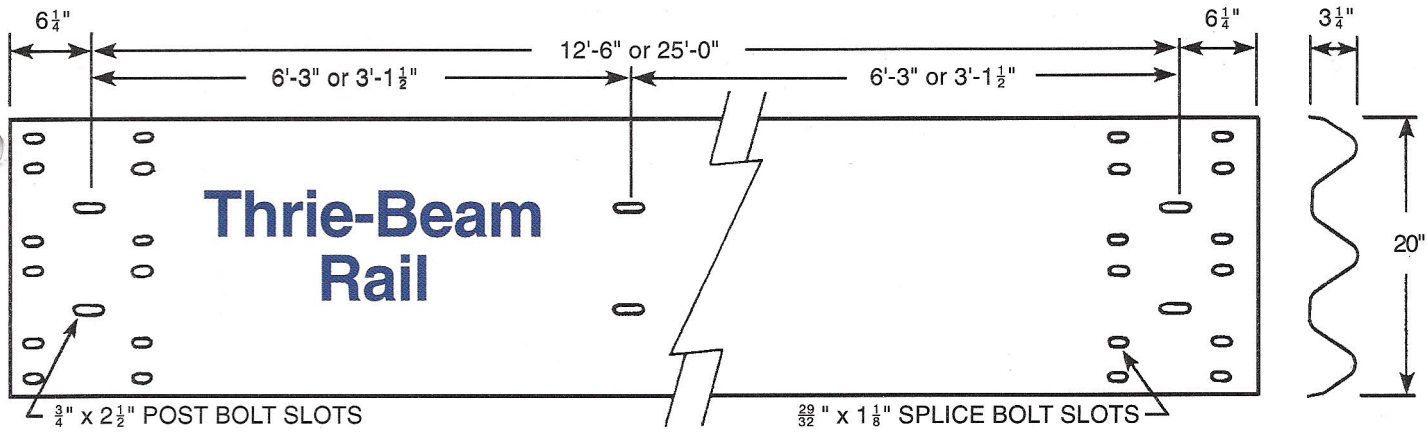

Item	Class A (.105 in. thick)	Class B (.135 in. thick)
Beam width, in., minimum	20	20
Beam depth, in., minimum	3	3
Cross-sectional area, sq. in.	3.12	4.01
Moment of inertia, in.^{4}	3.76	4.83
Section modulus, in.^{3}	2.22	2.87
Weight/ft., lb. (approximate)	10.5	13.5

Rail is supplied hot-dipped galvanized after fabrication in accordance with ASTM A-123.

Type

Type 1 = Zinc coated 1.8 oz/ft^2 minimum single spot

Type 2 = Zinc coated 3.6 oz/ft^2 minimum single spot

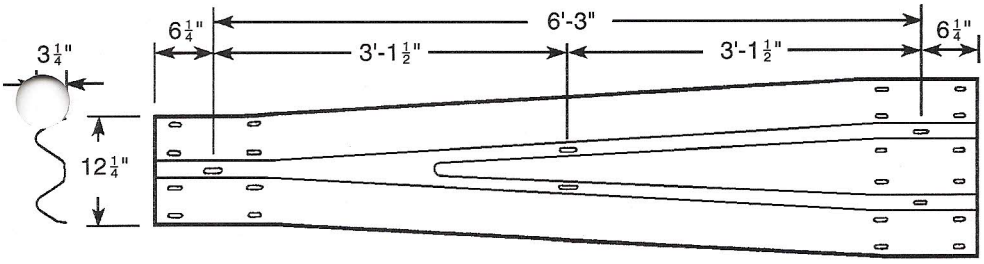

TRANSITION SECTION FROM THRIE-BEAM TO W-BEAM

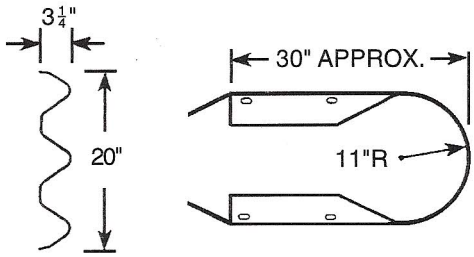

MEDIAN DIVIDER END

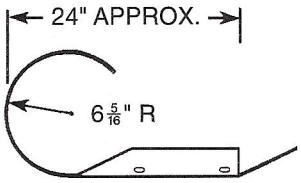

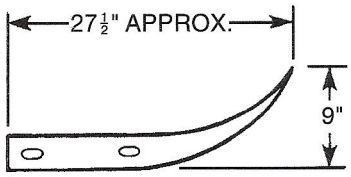

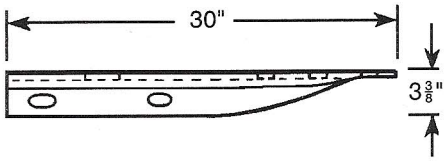

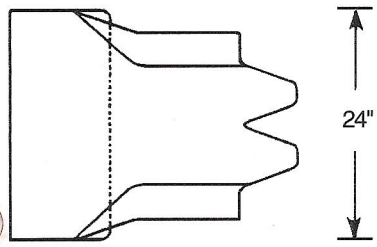

END SECTION (ROUNDED)

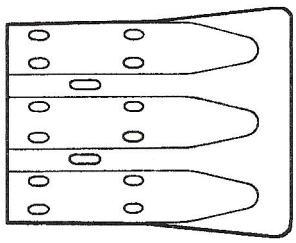

END SECTION (FLARED)

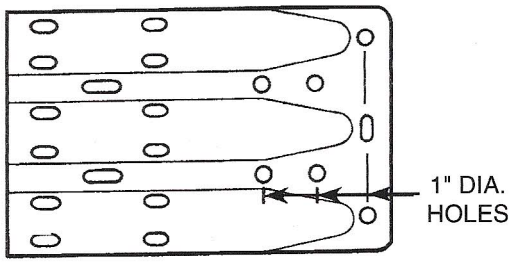

TERMINAL CONNECTOR PARAPET